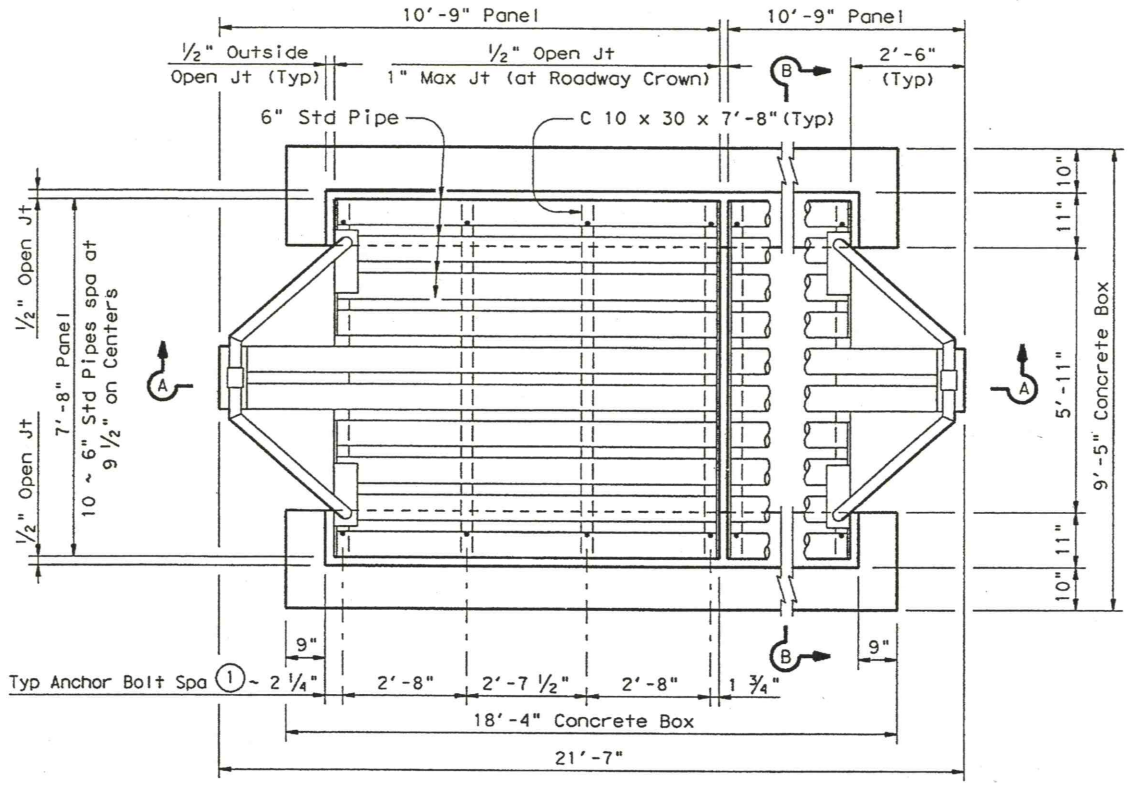

PLAN VIEW

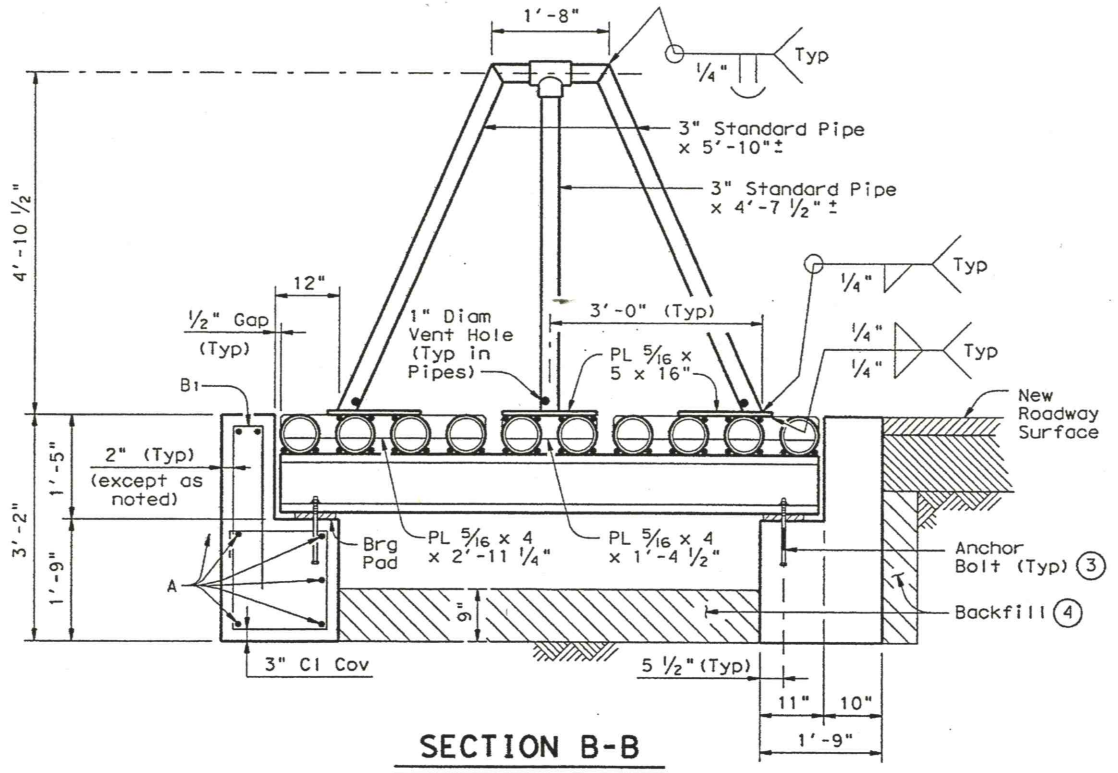

SECTION B-B

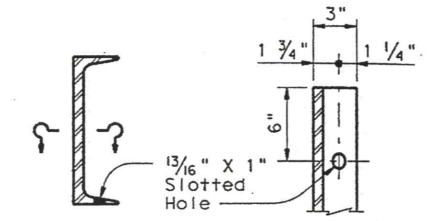

TYPICAL SECTION

SECTION THRU BOTTOM FLANGE

C 10 x 30 CHANNEL END DETAILS

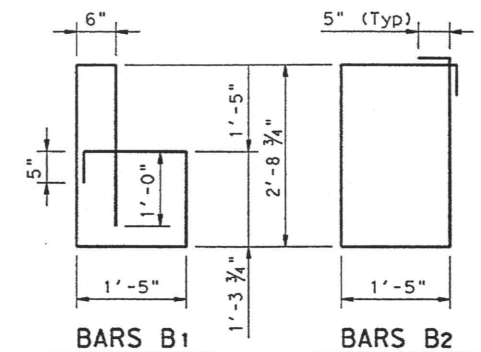

BARS B1 (22 ~ #4 x 10'-2 ½")

BARS B2 (8 ~ #4 x 9'-1 ½")

BAR DETAILS

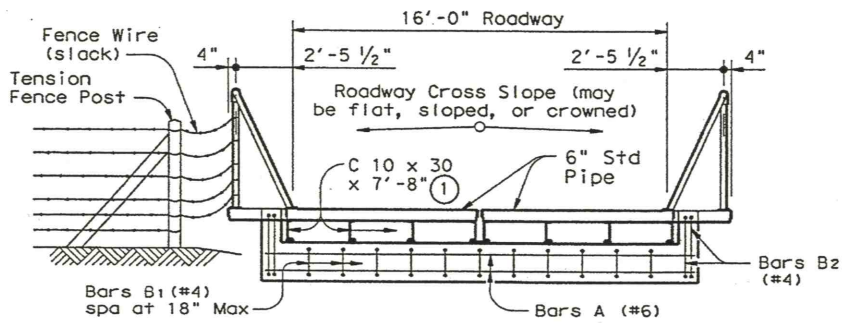

SECTION A-A

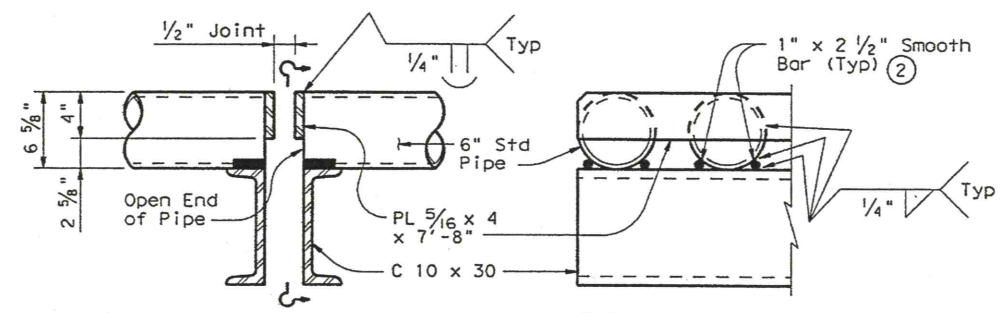

TYPICAL SECTION

PARTIAL ELEVATION OF END OF PANEL

DETAILS AT END OF PANEL

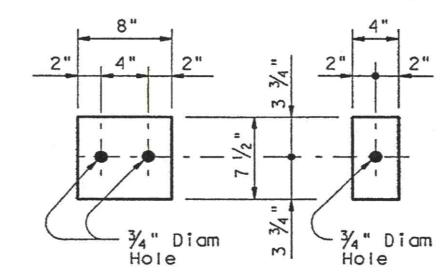

AT INSIDE OPEN JT

AT ALL OTHER LOCATIONS

BEARING PAD DETAILS

⅜" x 70 durometer Elastomeric Pad

HS20 LOADING

BILL OF MATERIALS

(Quantities shown are for Contractor's information only)

Description	Length		Number
C 10 x 30	7'-8"		8
6" Std Pipe	8'-2 ⅝"		16
6" Std Pipe	10'-8 5/16"		4
PL 5/16 x 4	7'-8"		2
PL 5/16 x 4	2'-11 ¼"		4
PL 5/16 x 4	1'-4 ½"		2
PL 5/16 x 5	1'-4"		6
3" Std Pipe	5'-10"		4
3" Std Pipe	4'-7 ½"		2
3" Std Pipe	8"		4
3" Pipe Tee	-		2
⅝" Bolt	12"		16
7 ½" Brg Pad	4"		14
7 ½" Brg Pad	8"		2
Structural Steel		Lb	5,620
Reinforcing		Lb	580
Class "A" Concrete		CY	5.9

GENERAL NOTES:

Designed in accordance with current AASHTO Standard and Interim Specifications. All construction and materials shall be in accordance with Texas Department of Transportation Standard Specifications.

If rock is encountered, depth of foundation may be varied as directed by the Engineer.

Steel Plates and Channels shall conform to ASTM A36. Pipe shall conform to ASTM A500 Grade B or to ASTM A53 Grade B Types E or S, standard weight.

All steel components, except reinforcing, shall be galvanized after fabrication in accordance with Item 445, "Galvanizing". Double dip galvanizing of a complete panel will not be permitted. Anchor bolts and nuts shall have Class 2A and 2B fit tolerances in accordance with ANSI B1.1. The nuts shall be tapped after galvanizing.

Anchor bolts shall conform to the requirements of ASTM A307 Grade A or ASTM A36 as specified in Item 449. Nuts shall be installed to a snug fit plus ⅛ turn. After installation, burr threads to prevent back turn of nut.

Bearing Pad shall be a ⅜" thick 70 durometer Elastomeric Pad in accordance with Item 435.

Typical calculated weight for each Panel = 2,800 Lbs

Number, type, and location of delineators adjacent to Cattle Guard shall be as directed by the Engineer.

Adjacent fences shall not be attached directly to the Outside Panel end pipes. Pipe assembly is not designed for the tension of the fence wires.

① Centerlines of Channel and Anchor Holes do not align. Care must, therefore, be taken when orienting channels during the panel fabrication process. Contractor shall verify anchor hole pattern within each panel prior to placing anchor bolts in concrete.

② At all locations where a flat steel plate is to be welded to a rounded pipe surface, a 1" x 2 ½" Smooth Bar (placed as shown in the detail) shall be included in the weld joint to provide additional support.

③ Anchor Bolts shall be ⅝" Diam x 12" Hex-Head Bolts, each with one (1) Hex Nut and one (1) Beveled Washer. Bolts shall project 2" minimum from the concrete (embeded 9" minimum).

④ The unclassified structural excavation shall be backfilled with Cement Stabilized Backfill prior to installation of metal Cattle Guard members.

SPECIAL NOTE:
In order to prevent inadvertent deflection of a moving vehicle, the Cattle Guard shall be installed perpendicular to flow of traffic.

CATTLE GUARD DETAILS

(ROUND PIPE MEMBERS)

(16'-0" ROADWAY)